IECEx / ATEX / KC / NEPSI flameproof

IECEx / ATEX / KC intrinsically safe

Robust valve control device giving a confidence in reliable performance and outstanding durability under harsh working environments

Features

- Easy maintenance
- Precise calibration with simple SPAN and ZERO adjustments
- Simple conversion to direct acting or reverse acting
- 1/2 split range available
- Rugged aluminum housing with corrosion-resistant coating
- Vibration resistant design
- Stainless steel gauges standard
- Restricted pilot valve orifice kit for small actuators included
- ATEX-certified flameproof Eex md IIB T5
  - KC-certified flameproof Ex dmb IIB+H_2 T6
  - NEPSI-certified flameproof Ex dmb IIB+H_2 T6
  - IECEx / KC-certified flameproof Ex dmb IIC T6/T5
  - ATEX-certified flameproof Ex dmb IIC T6/T5
  - IECEx / KC-certified intrinsically safe Ex ia IIC T6
  - ATEX-certified intrinsically safe Ex ia IIC T6

Options

- Position transmitter (4...20 mA output signal)
- 2 x SPDT limit switch
- 2 x P&F proximity sensor NJ2-V3-N
- Visual dome indicator
  - High temperature (+120℃)
  - Low temperature (-40℃)

Specifications

	EPR	
	Rotary Type (Cam Feedback)	
	Single	Double
Input Signal	4~20 mA DC (Note. 1)	
Input Resistance	235±15Ω	
Air Supply	Max. 7.0 bar (100 psi) free of oil, water, and moisture	
Operating Angle	60~100° (Note. 2)	
Pneumatic Connections	PT(Rc) 1/4 or NPT 1/4	
Electrical Connections	PF(G) 1/2 or NPT 1/2	
Protection Class	Ex dmb IIB+H_2 T6 / Ex dmb IIC T6/T5 Ex ia IIC T6 / IP66	
Ambient Temperature	-20 ~ +70℃ (Note. 3)	
Pressure Gauge	Stainless steel	
Output Characteristics	Linear	
Linearity	Within ±1.0 % F.S	Within ±1.5 % F.S
Sensitivity	Within ±0.5 % F.S	
Hysteresis	Within 1.0 % F.S	
Repeatability	Within ±0.5 % F.S	
Air Consumption	5 LPM (Sup. 1.4 kgf/㎠)	
Flow Capacity	80 LPM (Sup. 1.4 kgf/㎠)	
Material	Aluminum die-cast	
Weight	3.5 kg (with terminal box) 3.2 kg (without terminal box)	

With Dome Indicator

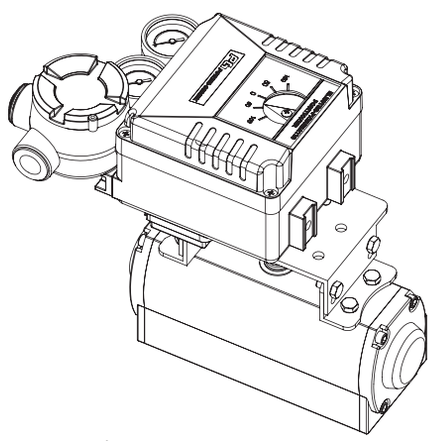

Note : 1) 1/2 spilt range is available for 4~12mA input signal or 12~20mA input signal
2) Operating angle can be adjusted to 0~60° or 0~100°
3) Temperature option : up to +120℃ without feedback options
up to +85℃ with feedback options
up to -40℃ without feedback options

Mounting

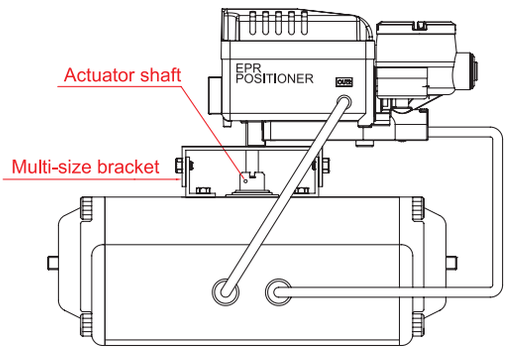

NAMUR Type Mounting

Note that feedback lever shaft "A" should be placed in the orifice of fork lever "B" and they should be in perfect alignment with a rotary actuator output shaft

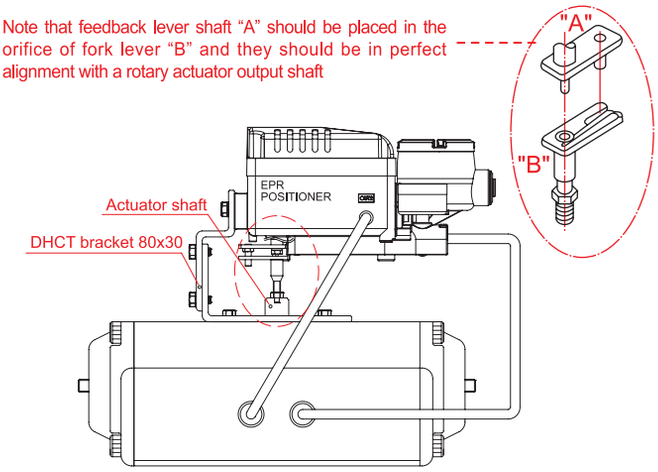

Fork Lever Type Mounting

Internal View

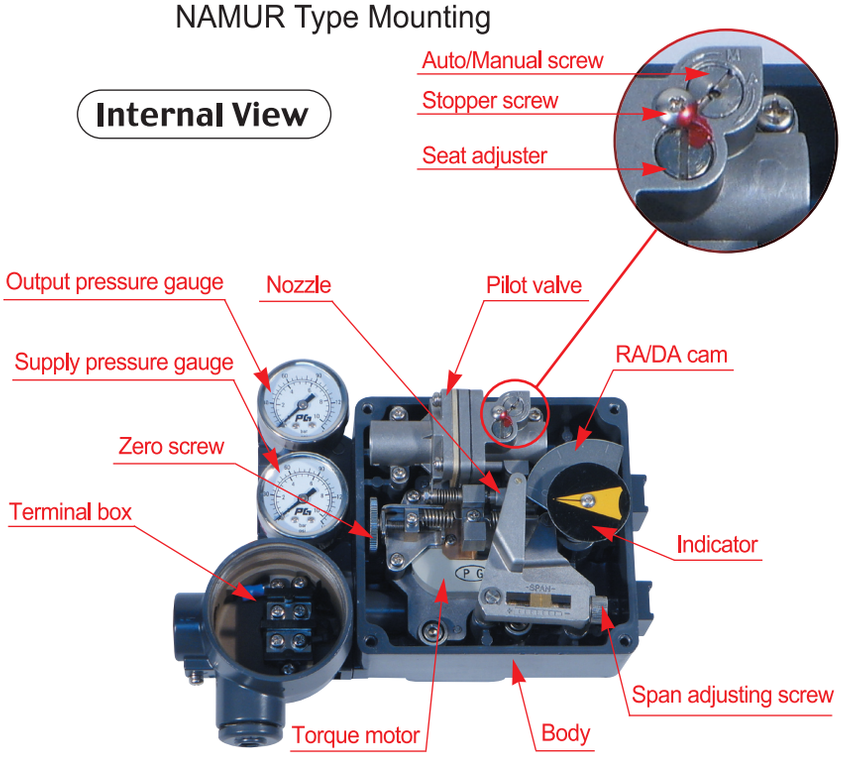

Multi-size Bracket

TYPE	H
80 x 30 x 20H	41
80 x 30 x 30H	51
130 x 30 x 20H	41
130 x 30 x 30H	51
130 x 30 x 50H	71

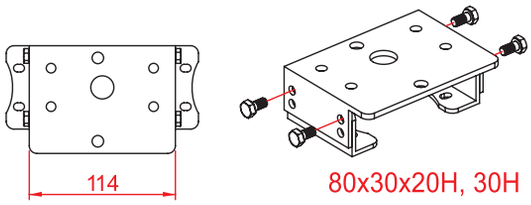

80x30x20H, 30H

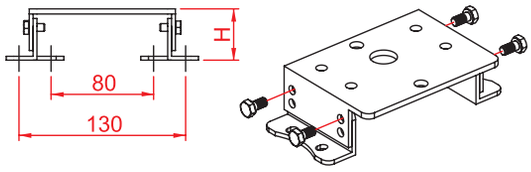

80x30x20H, 30H, 50H

Air Connections

Direct Acting (DA)

As the input signal increases, Actuator stem rotates clockwise.

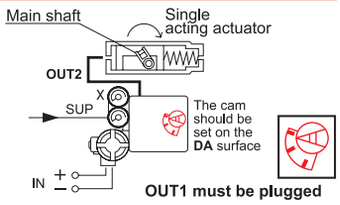

As the input signal increases, Actuator stem rotates clockwise.

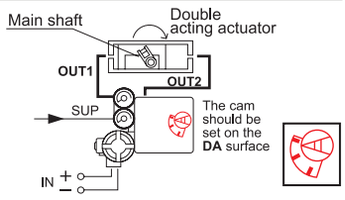

Reverse Acting (RA)

As the input signal increases, Actuator stem rotates counter clockwise.

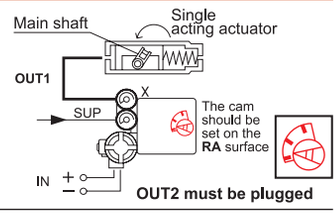

As the input signal increases, Actuator stem rotates counter clockwise.

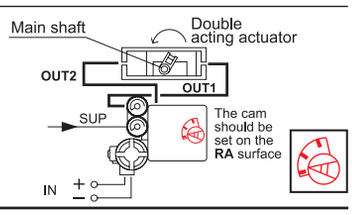

Position Transmitter Options (Built-in Type)

1. Board View

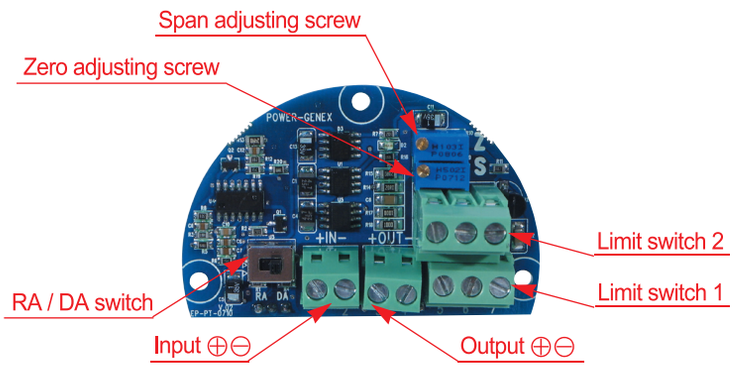

< Analog Position Transmitter & Limit Switches >

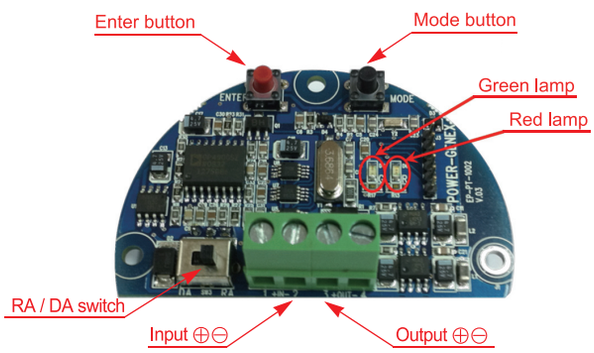

< Smart Position Transmitter >
(Zero / Span Auto Setting)

2. Position Transmitter (4-20mA output signal)

a. Specifications

Power Supply Rating	5.5 - 30 VDC loop power
Recommended Power Supply	24 VDC
Output Signal	4 - 20 mA, 2-wire
Operating Temperature	-20℃ ~ +85℃
Load Impedance	0 ~ 600 ohms
Max. Output	30 mA DC
Linearity	±1.0 %
Hysteresis	1.0 % of full scale
Repeatability	±0.5 % of full scale
Adjustment	Zero and Span in terminal box

b. with mA calibrator

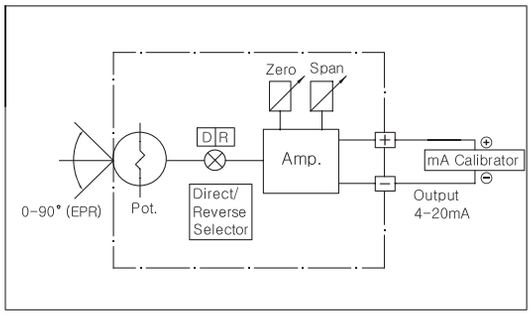

c. with multimeter

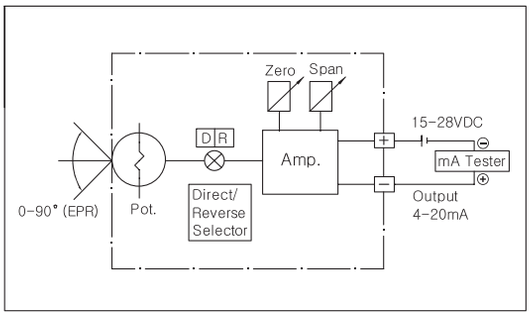

3. Wiring Diagram

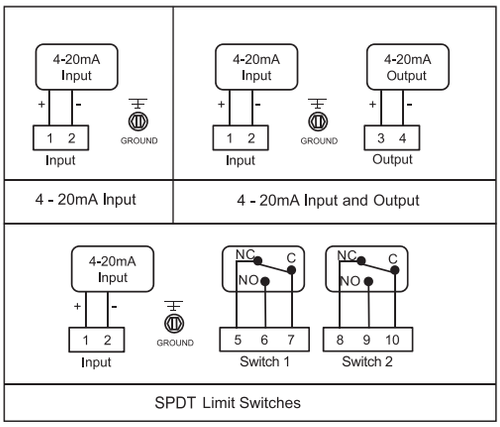

4. SPDT Limit Switches

a. Specifications

Contacts	SPDT Form C
AC Rating	16 A 1/2 HP 125/250 VAC
DC Rating	0.6 A 125 VDC / 0.3 A 250 VDC
Adjustment	Cams with set screws (L-wrench included for setting)

b. Wiring and Application

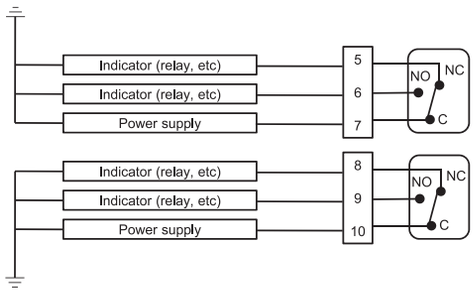

How to Order

EPR–	Protection Class	Feedback Shaft	Pressure Gauge (SUP. OUT)	Pilot Valve Orifice	Position Feedback	Connection Threads	Dome Indicator	Operating Temp.	Mounting Bracket

Description	Code
Protection Class :	F : KC flameproof Ex dmb IIB+H_2 T6 NEPSI flameproof Ex dmb IIB+H_2 T6 A : KC flameproof Ex dmb IIC T6/T5 D : IECEx flameproof Ex dmb IIC T6/T5 ATEX flameproof Ex dmb IIC T6/T5 I : IECEx intrinsically safe Ex ia IIC T6 ATEX intrinsically safe Eex ia IIC T6 KC intrinsically safe Ex ia IIC T6 W : Weatherproof to IP66
Feedback Shaft :	N : NAMUR shaft (direct mounting) A : Fork lever M6 x 40L B : Fork lever other size on request
Presure Gauge :	1 : 6 bar (90 psi) 2 : 10 bar (150 psi)
Pilot Valve Orifice :	S : Standard(Actuator volume over 180㎤) M : Small orifice (Φ1.0 or Φ0.7) (Actuator volume over 90 ~180㎤)
Position Feedback : (only for weatherproof type)	N : None (standard) O : Analog position transmitter (4 ~ 20mA output signal) S : Smart position transmitter (4 ~ 20mA output signal) L : 2 x SPDT limit switch P : 2 x proximity sensor P&F NJ2-V3-N M : O + L Q : O + P

Description	Code
Connection Threads : (pneumatic - electrical)	3 : PT(Rc) 1/4 - PF(G) 1/2 (standard) 4 : NPT 1/4 - NPT 1/2 5 : PT(Rc) 1/4 - M20 x 1.5
Dome Indicator :	N : Flat indicator (standard) D : Dome indicator
Operating Temperature : (only for weatherproof type)	T : 70℃ (standard) H : 120℃(without position feedback option) 85℃(with position feedback option) L : -40℃ (without feedback option)
Mounting Bracket :	N : None R : Multi-size NAMUR bracket for IEC 60534-6-2 / VDI/VDE 3845 (130x30x50 bracket on request) F : PG bracket 80x30 for fork lever type E : Multi-size NAMUR bracket for fork lever type (130x30x50 bracket on request)

Dimensions

A. With Flat Indicator

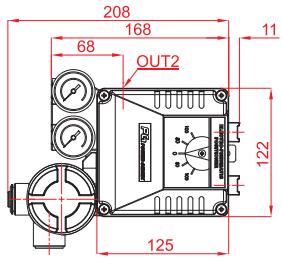

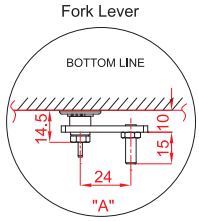

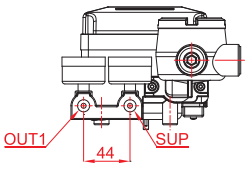

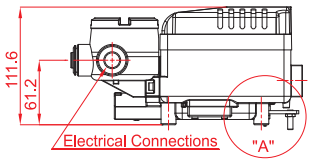

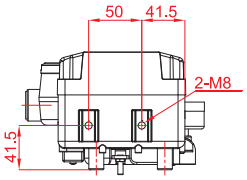

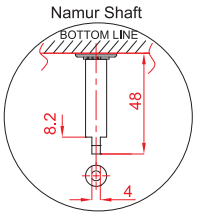

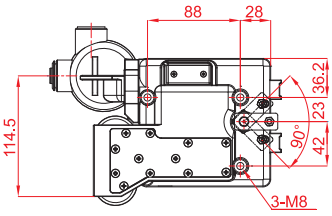
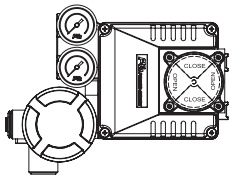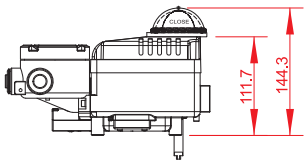
B. With Dome Indicator